MICROLAB · NEW MCC300 SERIES

MCC SERIES™ MODULAR CARRIER COMBINER

NEXT GENERATION

50% LESS RACK SPACE HALF THE SIZE

MICROLAB · A DIVISION OF RF INDUSTRIES

The redesigned MCC300 Series™ is a passive modular carrier combiner and point of interface for neutral host D-RAN and in-building or outdoor DAS, from SISO through 4x4 MIMO. Each filter card handles 100W per input, and the new hybrid combiners are rated to 300W per port. Coverage runs from 617 MHz through n77, including C-Band, 3.45 GHz and CBRS. Buy only what you need, and add modules as the network grows.





FEATURES & BENEFITS

Half the Rack Space
Two 8.62 x 8.81 x 1.73 in modules per 1RU; a 3-WSP 2x2 MIMO system drops from 8RU to 4RU

100W per Input
2.5x the power handling of the previous generation

300W/port Hybrid Combiners
New CM-680E and CM-141E hybrids cover 617–5925 MHz

No Attenuators Required
Filter cards take full radio power directly, with fewer components to buy and install

Low Insertion Loss
As low as <0.40 dB to maximize transmit EIRP at the antenna

Low PIM Performance
<-161dBc to protect network throughput and data performance

SISO / MIMO Support
Configurable for SISO, 2x2, or 4x4 MIMO neutral host systems

Built for Any Site
Under 8 lb per module; rack, wall or pole mount; IP67 rated

2 per 1RU	**100W** per input (was 40W)
300W per port (was 100W)	**50%** (8RU to 4RU)

WHAT'S NEW · MCC300 SERIES VS. PREVIOUS GENERATION

	PREVIOUS GENERATION	MCC300 SERIES
Rack space, 3-WSP 2x2 MIMO	8RU (6RU sub-rack + 2RU hybrid)	4RU
Sub-rack required	Yes	No (modules mount directly)
Filter card power per input	40W	100W
Hybrid combiner rating (per port)	100W	300W
External attenuators	Required	Not required
Modular & upgradeable	Yes	Yes

Microlab
A Division of RF Industries

MICROLAB · A BRAND AND PARTNER YOU CAN TRUST

sales@microlabtech.com · 858-549-6340 · microlabtech.com

MICROLAB · NEW MCC300 SERIES

MCC SERIES™ MODULAR CARRIER COMBINER

NEXT GENERATION
100W PER INPUT

APPLICATION NOTE

Mix and match filter modules and combiners to suit each site. Two sample configurations (4x4 MIMO also supported):

3 WSPS · 1-SECTOR SISO

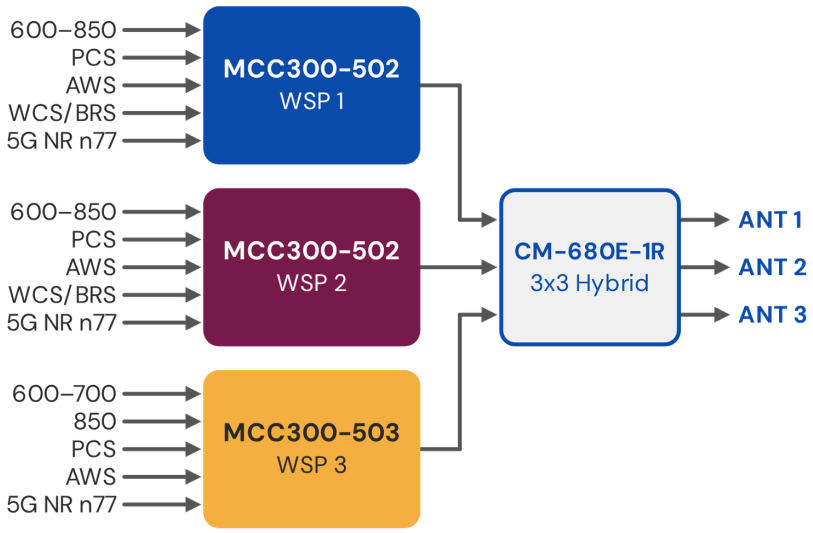

3 WSPS · 2X2 MIMO IN 4RU

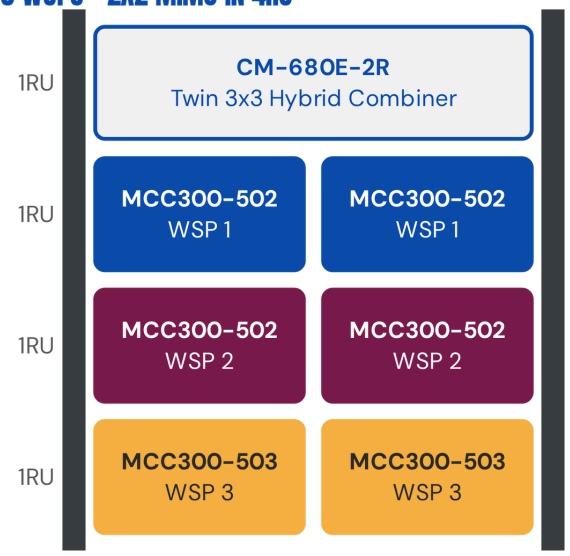

PRODUCT PORTFOLIO

FILTER MODULES	DESCRIPTION	STATUS
MCC300-502	Pentaplexer 600–850/PCS/AWS/WCS-BRS/5G NR n77, 100W, IP67	Available
MCC300-503	Pentaplexer 600–700/850/PCS/AWS/5G NR n77, 100W, IP67	Available
MCC300-504	Pentaplexer 600–850/PCS/AWS/DoD 3.45 GHz/C-Band, 100W, IP67	Coming Soon
MCC300-505	Pentaplexer 600–700/850/PCS-AWS/WCS-BRS/5G NR n77, 100W, IP67	Coming Soon
MCC300-401	Quadraplexer 600–850/PCS-AWS/WCS-BRS/5G NR n77, 100W, IP67	Coming Soon
MCC300-601	Hexaplexer 600–700/850/PCS/AWS/WCS-BRS/5G NR n77, 100W, IP67	Coming Soon
MCC300-602	Hexaplexer 600-700/850/PCS/AWS/DoD 3.45/C-Band, 100W, IP67	Coming Soon
HYBRID COMBINERS	**DESCRIPTION**	
CM-680E-1R	Single Hybrid Combiner 3x3, 617–5925 MHz, 3x300W, -161 dBc, IP67, 1RU rackmount	
CM-680E-2R	Twin Hybrid Combiner 3x3, 617–5925 MHz, 3x300W, -161 dBc, IP67, 1RU rackmount	
CM-141E-1R	Single Hybrid Combiner 4x4, 617–5925 MHz, 4x300W, -161 dBc, IP67, 1RU rackmount	
RACKS	**DESCRIPTION**	
MCC300-VER-WM04	4RU vented vertical wall-mount rack	
MCC300-SHF-WM04	4RU 2-post wall-mount shelf rack	
BRACKETS & ACCESSORIES	**DESCRIPTION**	
MCC300-BKT-RM	Rack mount side brackets, two modules in 1RU (2-sector SISO or 2x2 MIMO)	
MCC300-BKT-XRM	Extended L-bracket, centers a single module in 1RU (1-sector SISO)	
MCC300-BKT-XRM-4F	Extended L-bracket with integrated 4.3-10 (f–f) bulkhead for through-card use	
MCC300-BKT-TW	Bracket kit for stacking two modules in a twin configuration	
MCC300-BKT-WP	Wall or pole mounting kit	
MCCJ-ME-ME-19 / -15	PIM-tested 4.3-10 (m–m) jumpers, 19" vertical or 15" horizontal	
TA-2MHE	2W resistive termination for unused ports, 4.3-10 (m), IP67	

Microlab
A Division of RF Industries

MICROLAB · A BRAND AND PARTNER YOU CAN TRUST
sales@microlabtech.com · 858-549-6340 · microlabtech.com